Lecture - 22

Cascaded Stages:- * If we build a CE stage and given various constrains, its gain is not sufficient. for Achieving higher gain we amplify an input signal by one stage and send to another stage for further amplification.

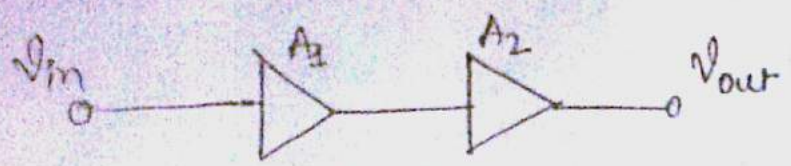

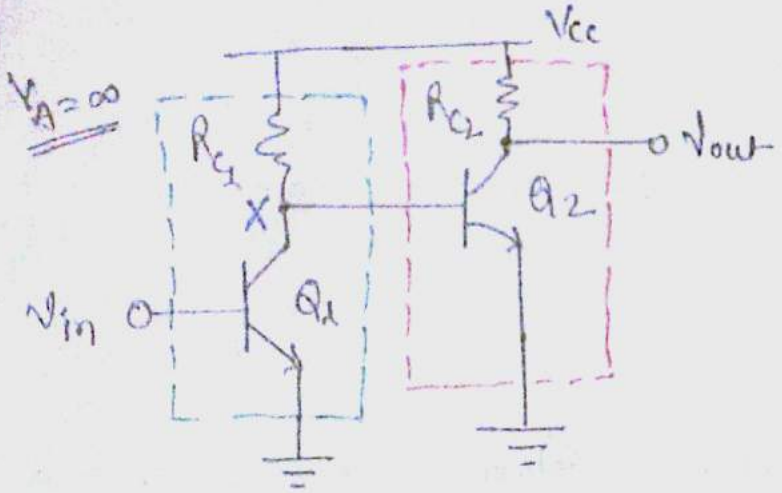

* It is called as two stage amplifiers or cascaded amplifiers.

(1) $$\frac{v_{out}}{v_{in}} = \underbrace{\frac{v_x}{v_{in}}}_{A_{v_1}} \times \underbrace{\frac{v_{out}}{v_x}}_{A_{v_2}}$$

This tells us that to find overall gain, we find gain of first stage and second stage and multiply it.

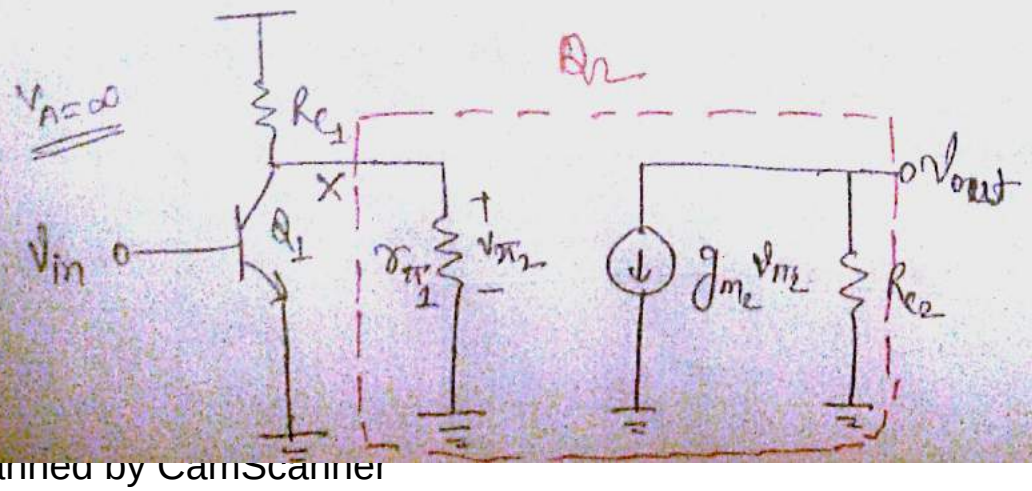

Scanned by CamScanner

$A_{v_1} = -g_{m_1} \times$ (total tied resistance b/w Emitter and ground)

$= -g_{m_1} \times (r_{\pi_2} \| R_{c_1})$

→ The r_{π_2} is loading the first stage and reducing the gain before we attached the second stage.

For second stage,

$$\boxed{A_{v_2} = -g_{m_2} R_{c_2}}$$

$$\Rightarrow \boxed{\frac{V_{out}}{V_{in}} = g_{m_1} g_{m_2} R_{c_2} (R_{c_1} \| r_{\pi_2})}$$

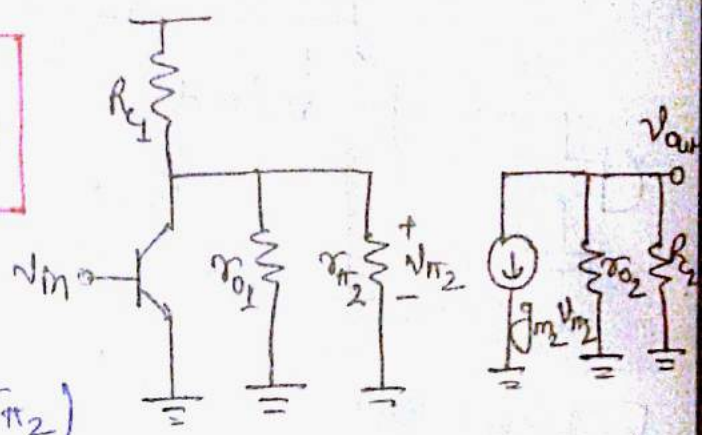

Quiz:- Find the gain if $V_A < \infty$

$A_{v_1} = -g_{m_1} \times (R_{c_1} \| r_{o_1} \| r_{\pi_2})$

$A_{v_2} = -g_{m_2} \times (R_{c_2} \| r_{o_2})$

$$\Rightarrow \boxed{\frac{V_{out}}{V_{in}} = g_{m_1} g_{m_2} (R_{c_1} \| r_{o_1} \| r_{\pi_2})(R_{c_2} \| r_{o_2})}$$

---

* Problem of Gain Variation :- If, $V_A = \infty$ then gain is

$$A_v = -g_m R_C = -\frac{I_C R_C}{V_T}$$

(1) Variation with temperature & process.

$I_C = I_S \exp\left(\frac{V_{BE}}{V_T}\right)$ → since I_S depends on temp. & V_T also depends on temperature hence I_C varies with temperature. That is called Temperature variation.

Scanned by CamScanner

→ Process means fabrication or manufacturing process, so if we have 10 ten of the CE Amplifiers, all of the amplifier does not have same gain because the R_C resistor have some variability. It is called process variation.

(2) Variation with signal amplitude

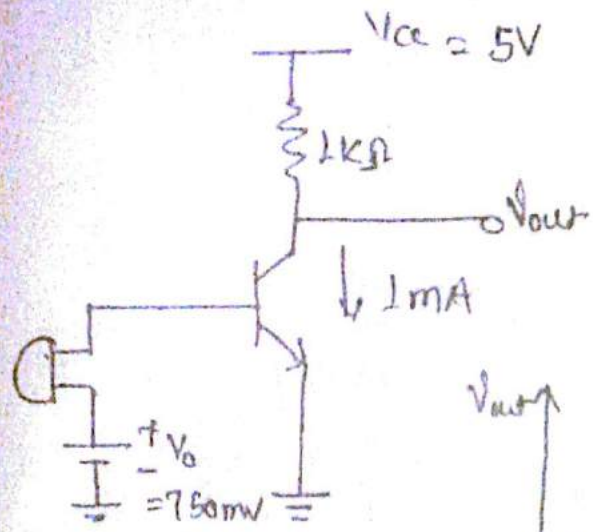

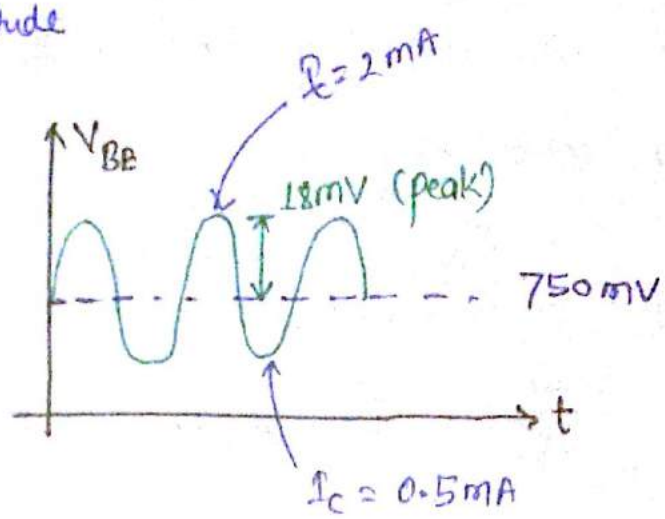

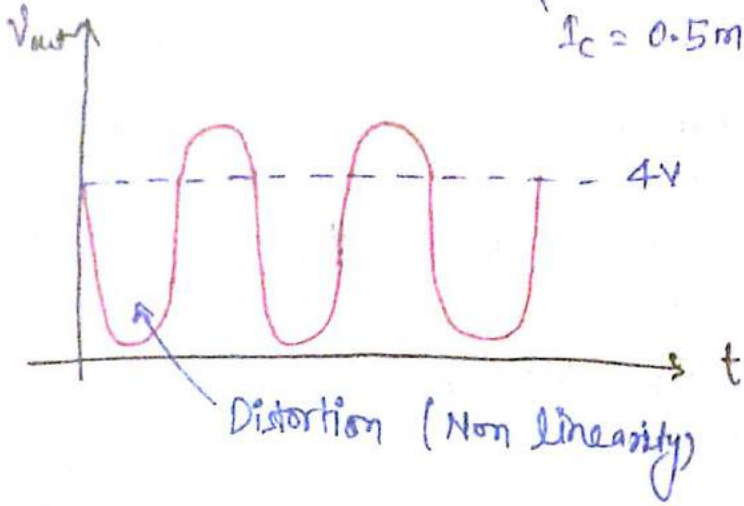

$$I_C = I_S \exp\left(\frac{V_{BE}}{V_T}\right)$$

$$= \underbrace{I_S \exp\left(\frac{750}{26}\right)}_{\text{Current without signal}} \underbrace{\exp\left(\frac{18}{26}\right)}_{2}$$

$$= 1mA \times 2 = 2mA$$

→ Since as the input signal changes significantly then gain also changes significantly.

→ When the input signal is 18 mV then I_C becomes 2mA therefore g_m increases by factor of 2 i.e. voltage gain increases.

→ When the input signal is −18 mV then I_C becomes 0.5mA therefore g_m decreases by factor of 2 i.e. voltage gain decreases. Therefore we get distorted sinusoidal waveform at the output.

Scanned by CamScanner

→ The voltage gain of a common emitter stage varies not just with environmental issues but also the signal levels coming in.

→ If we want to minimize the distortion in output we make sure that when the signal comes in, it changes the collector current negligibly.

* **CE Stage with emitter degeneration:-** This is used to reduce the problem of variation of gain in CE stage.

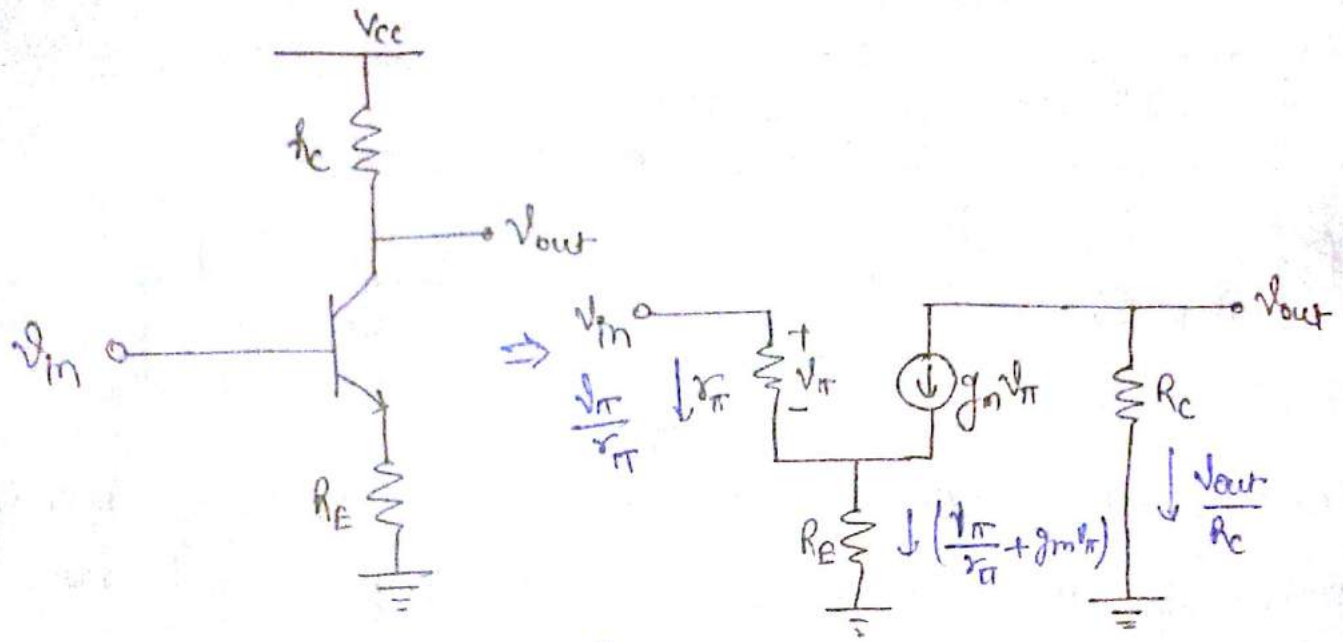

KCL at output node will give us,

$$g_m V_\pi = -\frac{V_{out}}{R_c} \Rightarrow V_\pi = \frac{-V_{out}}{g_m R_c}$$

KCL at emitter node,

$$\underbrace{\left(\frac{V_\pi}{r_\pi} + g_m V_\pi\right)}_{\text{current through } R_E} R_E = \text{Voltage drop on } R_E$$

$$\Rightarrow \text{Voltage drop on } R_E = -\left(\frac{1}{r_\pi}\cdot\frac{V_{out}}{g_m R_c} + g_m \frac{V_{out}}{g_m R_c}\right) R_E$$

KVL at input loop

$$V_{in} = \frac{-V_{out}}{g_m R_c} - \frac{V_{out}\cdot R_E}{g_m r_\pi R_c} - \frac{V_{out}\cdot R_E}{R_c}$$

Scanned by CamScanner

Since $g_m r_\pi = \beta$ therefore

$$v_{in} = \frac{-\beta v_{out} - g_m R_E v_{out} - \beta g_m R_E v_{out}}{\beta g_m R_C}$$

$$\Rightarrow \boxed{\frac{v_{out}}{v_{in}} = -\frac{\beta g_m R_C}{\beta + (\beta+1) g_m \cdot R_E}}$$

← Voltage gain of degenerated CE stage

$$= -\frac{R_C}{\frac{1}{g_m} + \frac{(\beta+1)}{\beta} R_E}$$

$$\boxed{A_v \simeq -\frac{R_C}{\frac{1}{g_m} + R_E}}$$

No degeneration,

$$\boxed{A_v = -g_m R_C}$$

* This equation tells us that if R_E is large enough then even though g_m which is I_C/V_T changes with temperature, it affects this fraction to a lesser extent.

In the previous equation of A_v, if the g_m changes by 50% then A_v also changes by 50% but in this case, if the g_m changes by 50% because we are adding it some another number the result will not change by as much as 50%. So R_E tends to swamp the variation in g_m.

* In the variation of resistance by the process, if R_C changes by factor of 2 then R_E also changes by factor of 2 because it have same manufacturing process. So the result will not change much.

Scanned by CamScanner

Lecture - 23

• Properties of CE stage with Degeneration :-

1. Gain is less sensitive to temperature and process variation and to signal amplitude.

$$A_v = -\frac{R_C}{\frac{V_T}{I_C} + R_E}$$

This tells us that even though I_C may vary with the signal level because as the signal comes in I_C varies with some extent but denominator does not change as much.

To minimize sensitivity to I_C, pick $R_E \gg \frac{V_T}{I_C}$, which means: $\boxed{R_E I_C \gg V_T}$ ← Drop across R_E resistor

$$\Rightarrow \boxed{A_v \approx -\frac{R_C}{R_E}}$$

2. The Gain is lower with degeneration than without degeneration

3. A_v of the circuit is equal to

$$\boxed{A_v = -\frac{\text{Resistance tied between collector \& ground}}{\frac{1}{g_m} + \text{resistance tied between emitter \& ground}}}$$

Input impedance calculation of CE Stage with Degeneration:-

$$R_{in} = \frac{v_x}{i_x}$$

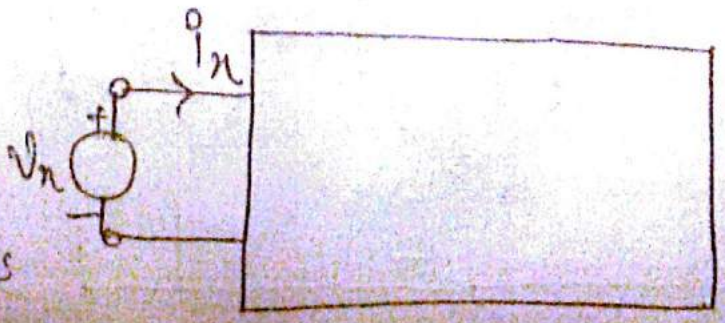

when all sources are zero.

Scanned by CamScanner

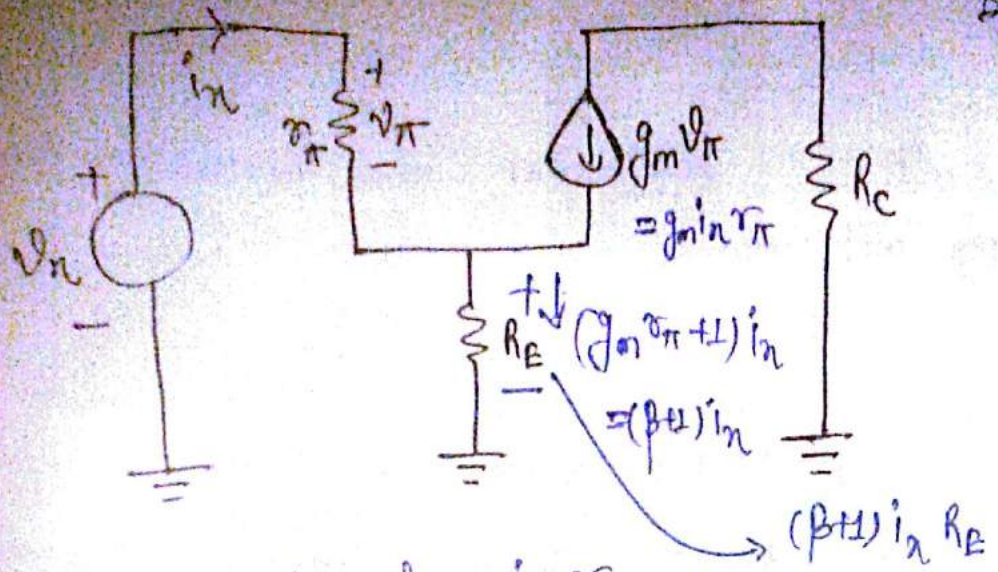

* r_π and R_E are not in series because they do not have same current.

$\because \quad v_\pi = i_x r_\pi$

$v_x = i_x r_\pi + (\beta+1) i_x R_E$

$\Rightarrow \quad v_x = i_x [r_\pi + (\beta+1) R_E]$

$\Rightarrow \quad \boxed{R_{in} = \frac{v_x}{i_x} = [r_\pi + (\beta+1) R_E]}$ ← Input impedance due to degeneration

* The degeneration increases the input impedance, hence we can get higher gain than without degeneration.

<u>Output impedance:-</u> $V_A = \infty$

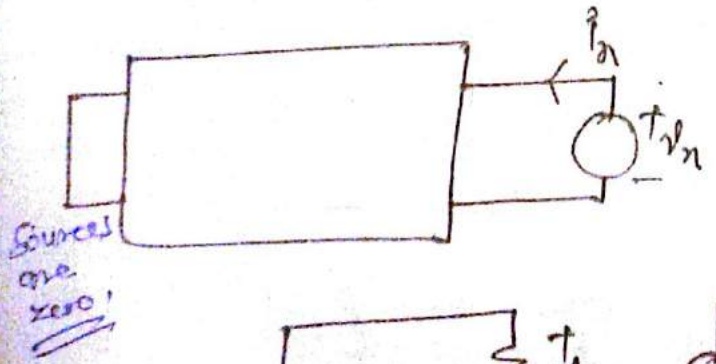

→ In this driven voltage has to be zero.

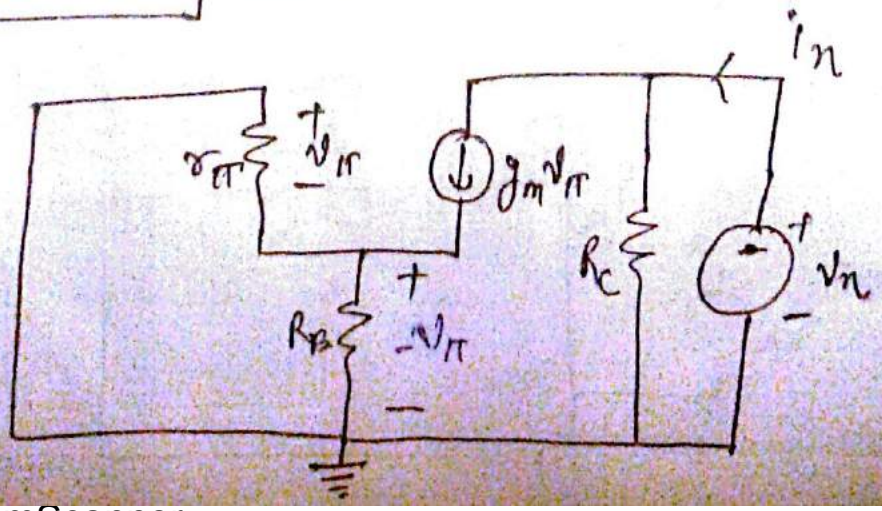

Scanned by CamScanner

→ Since r_π and R_E are in parallel then voltage across R_E will be $-v_\pi$.

Write KCL at emitter node

$$\frac{v_\pi}{r_\pi} + g_m v_\pi = \frac{v_\pi}{R_E} \Rightarrow v_\pi = 0$$

$\Rightarrow g_m v_\pi = 0$ so current source $g_m v_\pi$ will be O.C.

$$\therefore \boxed{R_{out} = \frac{v_x}{i_x} = R_C}$$

Summary:-

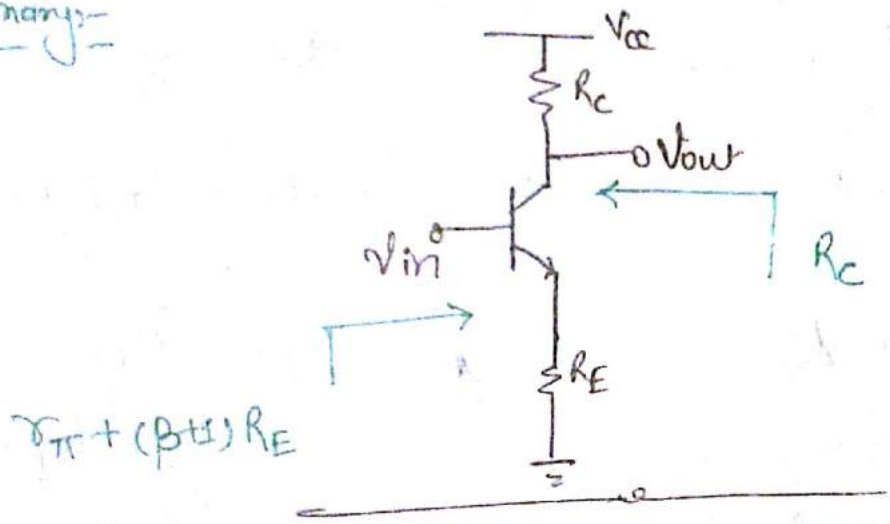

$$A_v = -\frac{R_C}{\frac{1}{g_m} + R_E}$$

Quiz:-

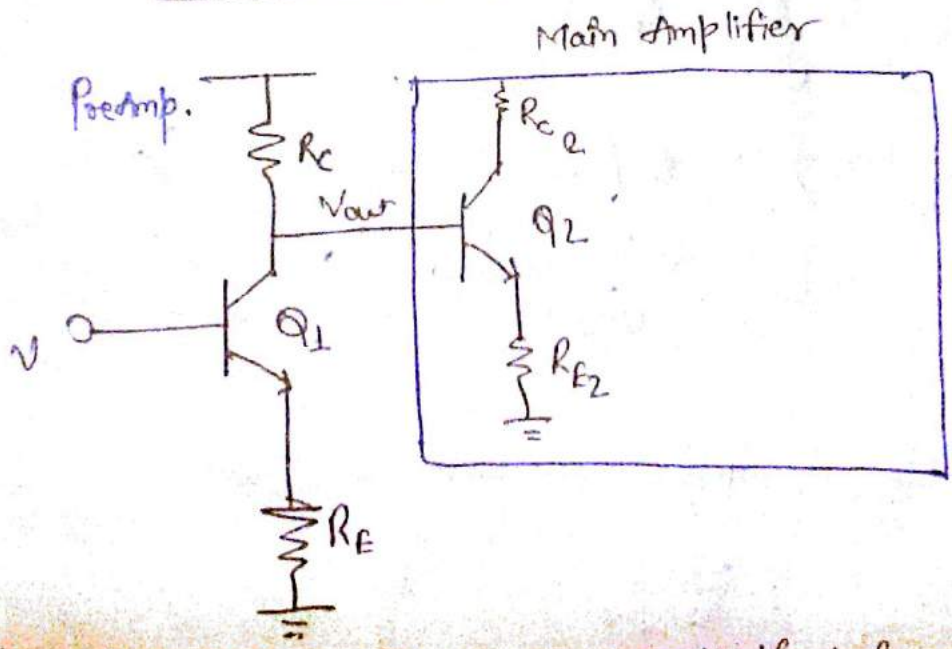

Calculate the gain of the Preamplifier by itself before we connected main amplifier and after the main amplifier?

Scanned by CamScanner

Ans (a) Gain of the amplifier when it is connected to main amplifier,

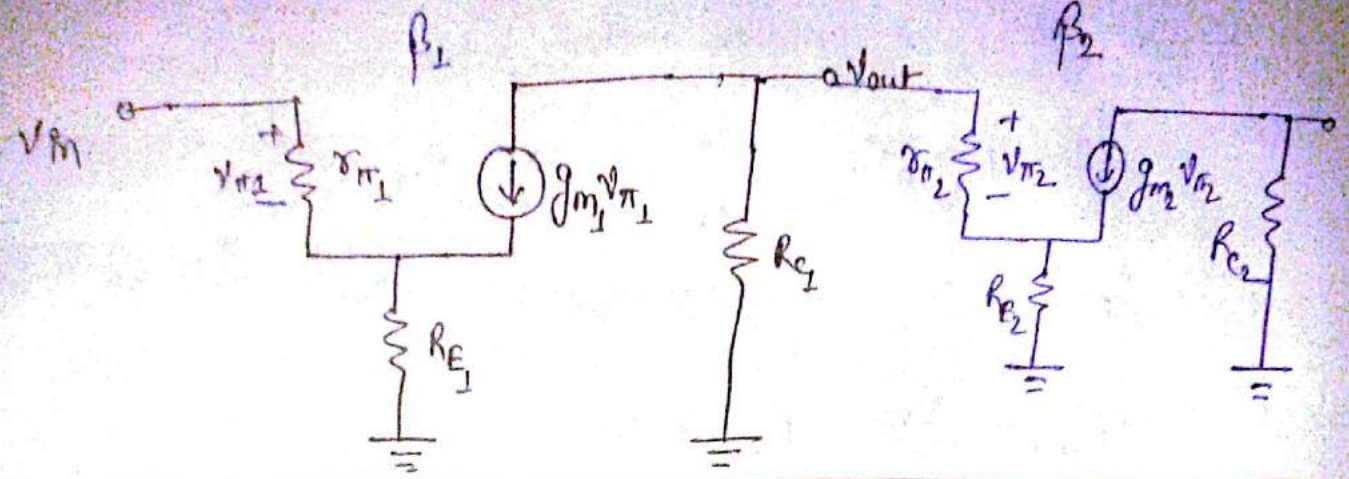

$$\boxed{A_v = -\frac{R_{C_1} \parallel R_{in_2}}{\frac{1}{g_{m_1}} + R_{E_1}} = -\frac{R_{C_1} \parallel \left[r_{\pi_2} + (\beta_2+1) R_{E_2}\right]}{\frac{1}{g_{m_1}} + R_{E_1}}}$$

(b) Gain of the amplifier when it is not connected to main amplifier,

$$\boxed{A_v = -\frac{R_{C_1}}{\frac{1}{g_{m_1}} + R_{E_1}}}$$

$A_v = A_{v_1} \cdot A_{v_2} =$

$A_{v_2} = -\dfrac{R_{C_2}}{\frac{1}{g_{m_2}} + R_{E_2}}$

$\Rightarrow A_v = -\left[\dfrac{R_{C_1} \parallel \left[r_{\pi_2} + (\beta_2+1) R_{E_2}\right]}{\frac{1}{g_{m_1}} + R_{E_1}}\right] \left[R_{C_2}\right]$

Let's build an constant current source :-

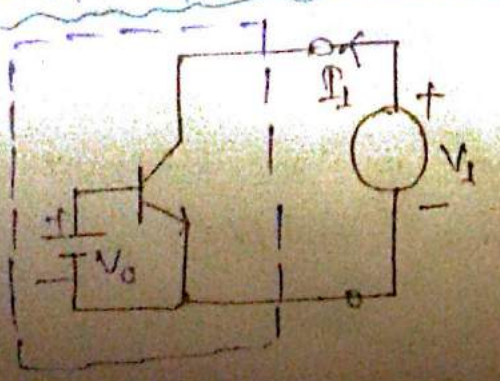

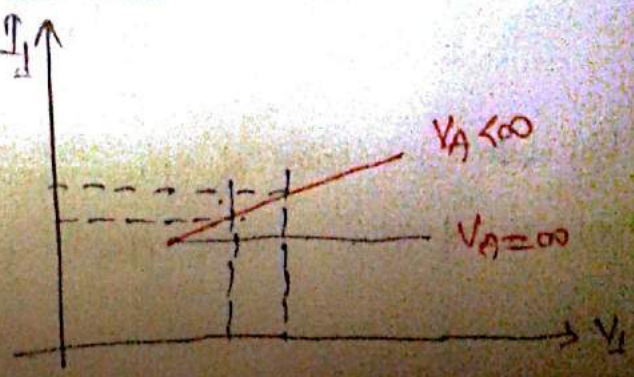

Scanned by CamScanner

* When the circuit is applied by V_1 and get current I_1 then current I_1 will be constant when $V_A = \infty$. If $V_A < \infty$ then I_1 current has some slope. So its works as current source.

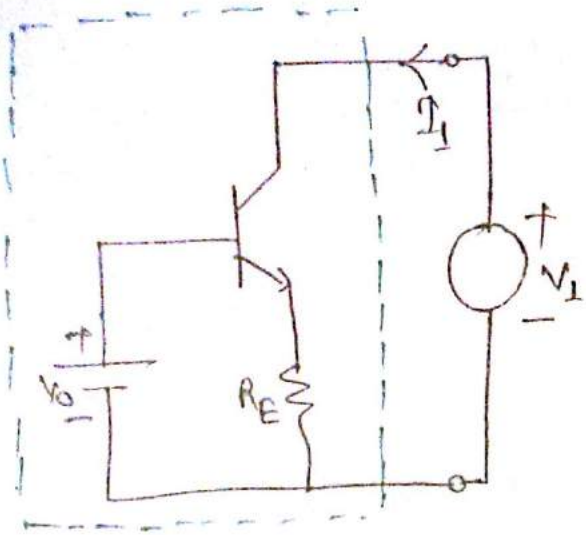

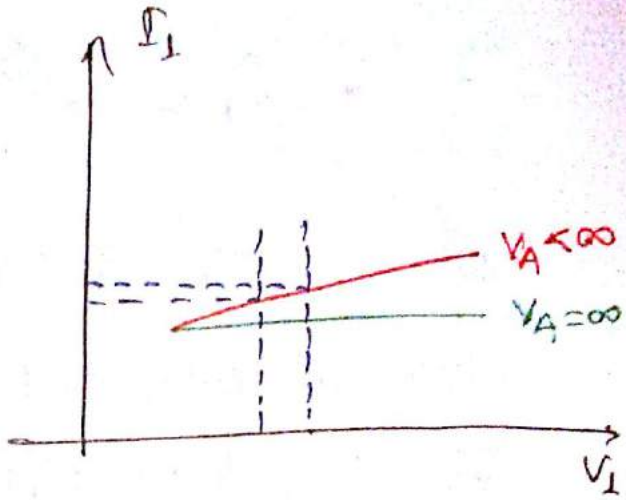

→ When the same test is applied at this ckt when $V_A = \infty$ then $V_{collector}$ goes up and down then current does not change. So current will always the same.

→ We consider a narrow range of V_1, so V_1 varies by only a small amount, say 10mV then we look at the variation on I_1 as a result of that change.

→ for a given voltage change, we have less current change in second case then the second case has the more constant current which means its a better current source.

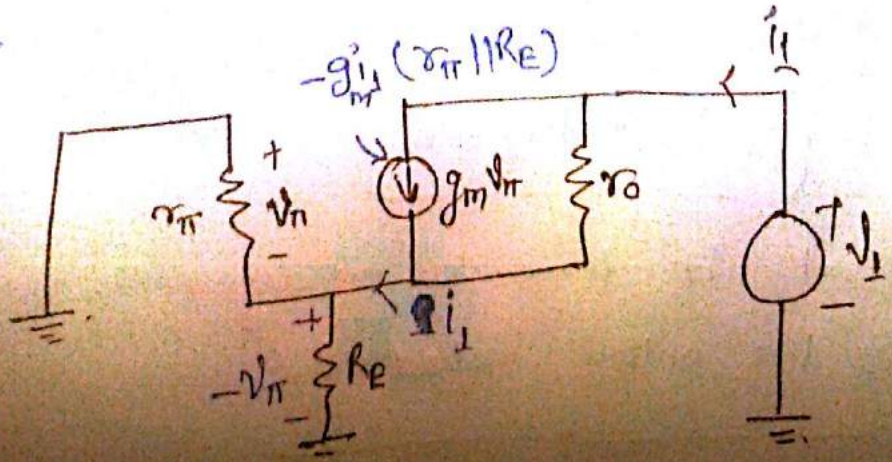

Scanned by CamScanner

KCL at the emitter loop,

$$+\frac{v_\pi}{r_\pi} + i_1 = -\frac{v_\pi}{R_E}$$

$$\Rightarrow \quad i_1 = -\frac{v_\pi}{r_\pi} - \frac{v_\pi}{R_E}$$

$$\Rightarrow \quad -v_\pi = i_1 (r_\pi || R_E)$$

KVC at outer loop,

$$v_1 = \left[i_1 + g_m i_1 (r_\pi || R_E)\right] r_o + i_1 \left[r_\pi || R_E\right]$$

$$\boxed{\frac{v_1}{i_1} = \left[1 + g_m (r_\pi || R_E)\right] r_o + (r_\pi || R_E)} = R_{out}$$

→ We know that for the first case voltage V_1 to current i_1 change is r_o i.e. output impedance.

But in the second case we get the change in V_1 to i_1 is higher because r_o is multiplied by a factor which is greater than 1 so we have higher result than previous case. It means for a given voltage change we have smaller current change therefore we would have flatter characteristics so its a better current source.

Intrinsic gain

$$\boxed{R_{out} = (1 + g_m r_o)(r_\pi || R_E) + r_o}$$

This tells us that if there is no degeneration then we have only r_o as the output impedance.

Scanned by CamScanner